INSTRUCTION

Flat Slim
312132.004

RZB LIGHTING

~ 220 - 230 V 50/60 Hz IP 65 IK03

3 x 1,5 mm²

1,50 mm²



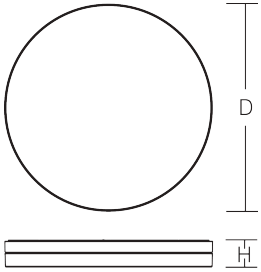

[mm]		
D 230, H 63	LED	1,34 kg

Φ [lm]	P [W]	P
1000	13	1 x 13 W

CCT [K]	CRI	RG	EEK	EEK
3000	83	RG 1	A+	A+

I_{max} $I_{max}/2$ T50	B10 [St.]	B16 [St.]	C10 [St.]	C16 [St.]
0,15 A / 10000 µs	114	182	114	182

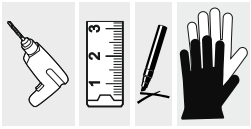

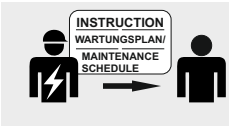

DIN EN 61340-5-1



EN 12464
EN 13201



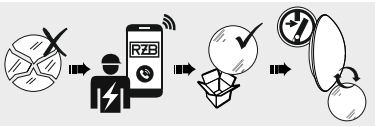

EN 12464
EN 13201



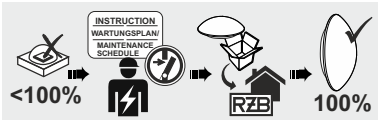

EN 12464



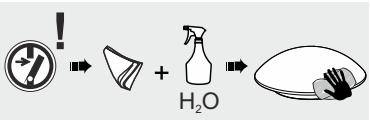

1

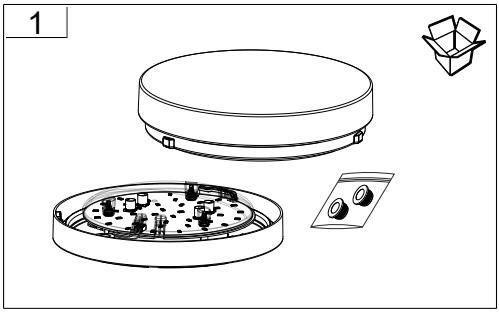

2

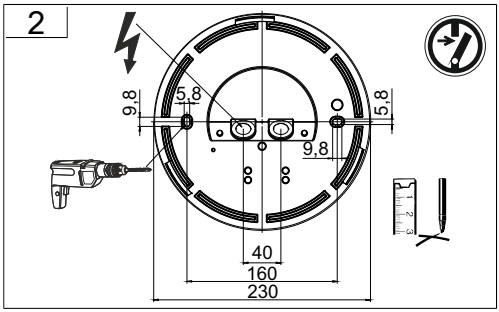
9,8
5,8
5,8
9,8
40
160
230

3

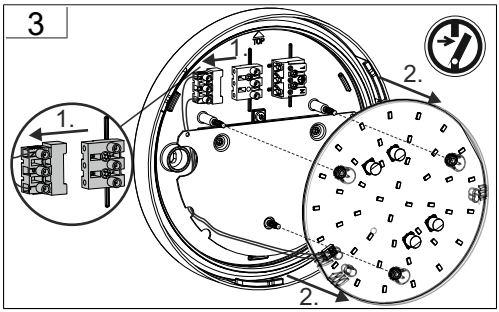
1.
2.
2.

4

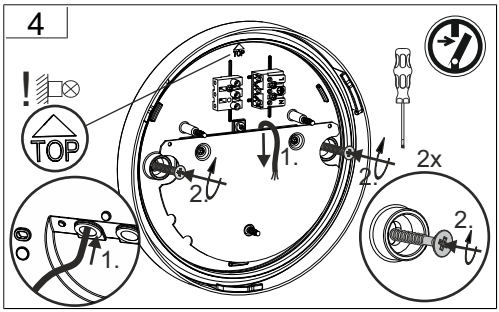
!
TOP
1.
2.
1.
2.
2x
1.
2.

5

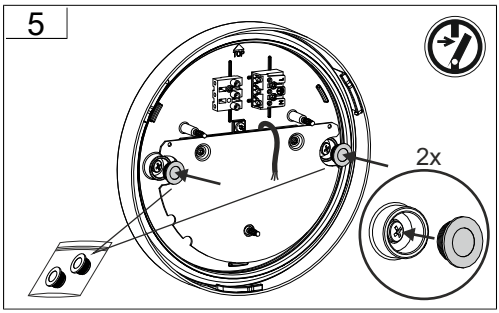
2x

6

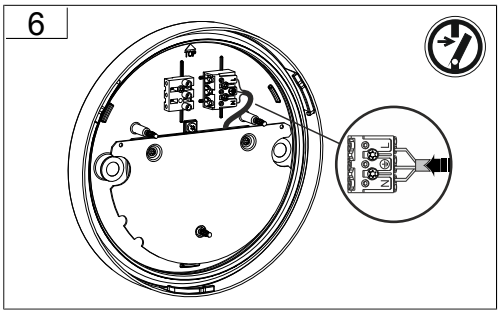
N
L

7

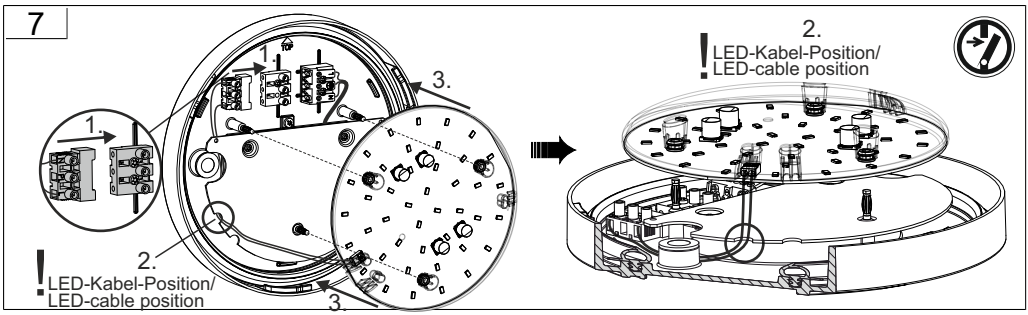
1.
3.
2.
! LED-Kabel-Position/
LED-cable position
3.
2.
! LED-Kabel-Position/
LED-cable position

7.1

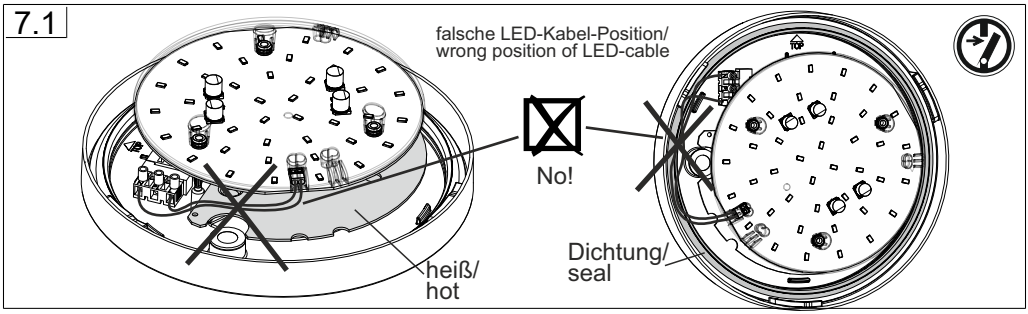
falsche LED-Kabel-Position/
wrong position of LED-cable
No!
heiß/
hot
Dichtung/
seal

8

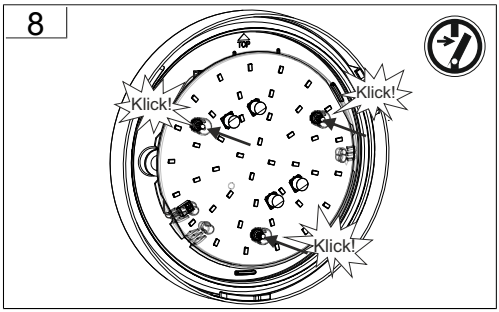
Klick!
Klick!
Klick!

9

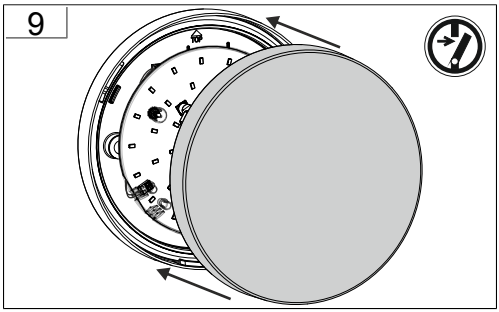

10

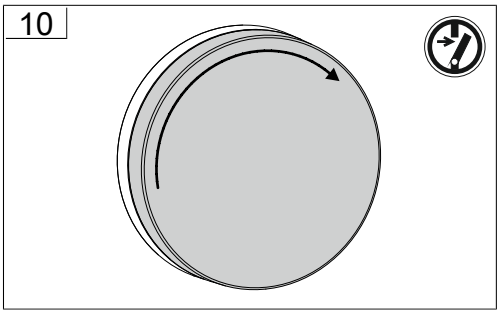

11

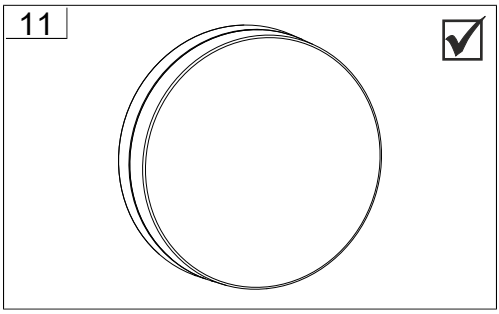

		[mm]	
	E90-6706.000	D 170, H 22	187 g
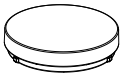	05-312132.002	D 230, H 51	0,7 kg







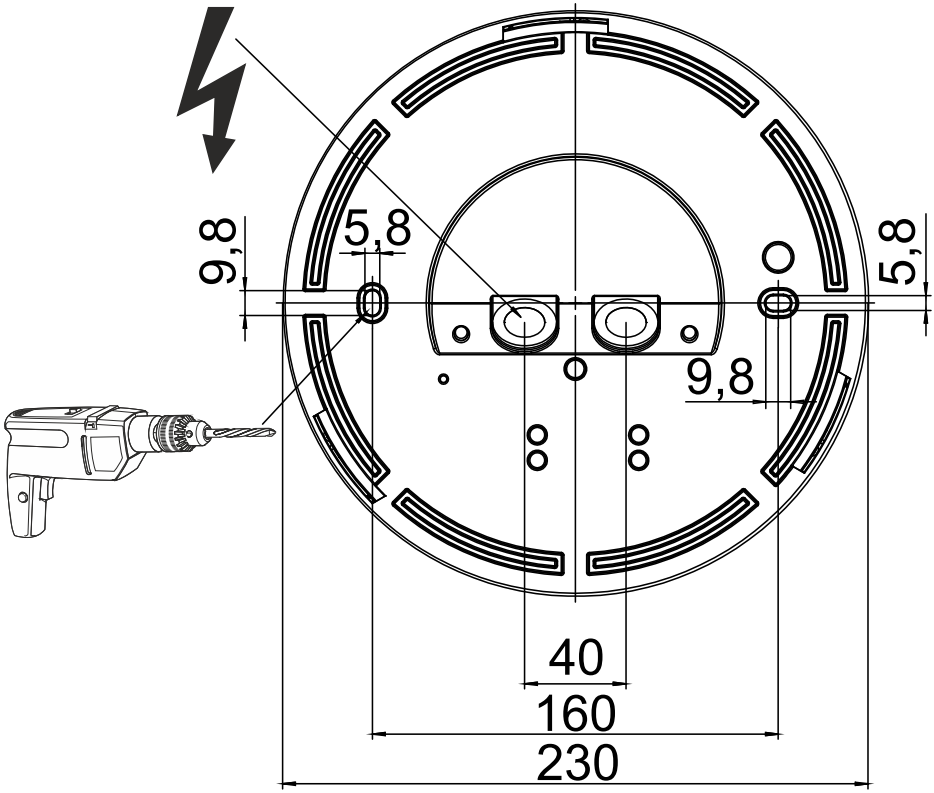

RZB - Rudolf Zimmermann, Bamberg GmbH
Rheinstraße 16
96052 Bamberg
Telefon: 0951/7909-0
Telefax: 0951/7909-198
E-mail: info@rzb-leuchten.de