INSTRUCTION

PE /625-EL LED 6025

PE /600-EL LED 6026

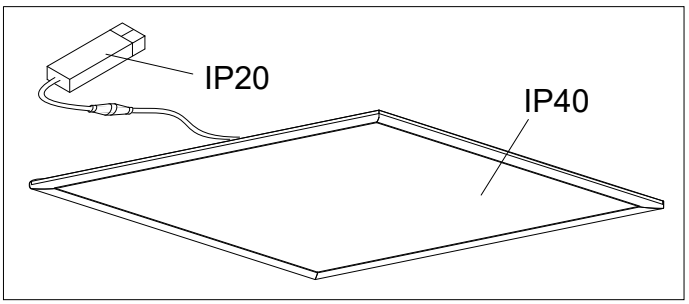

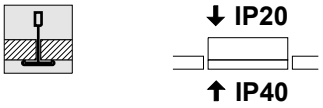

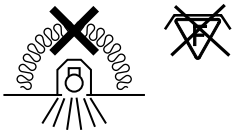

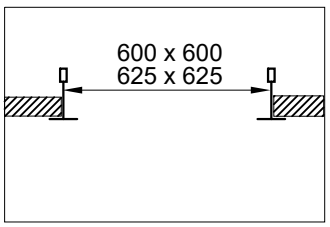

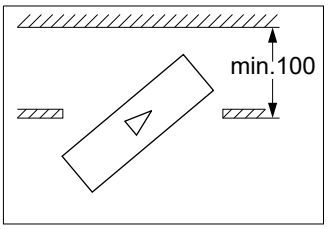

1

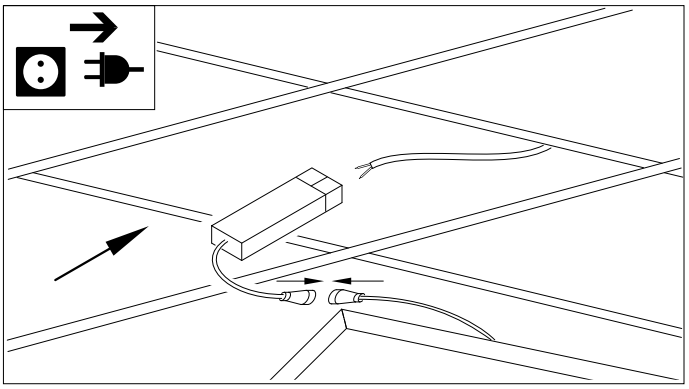

2

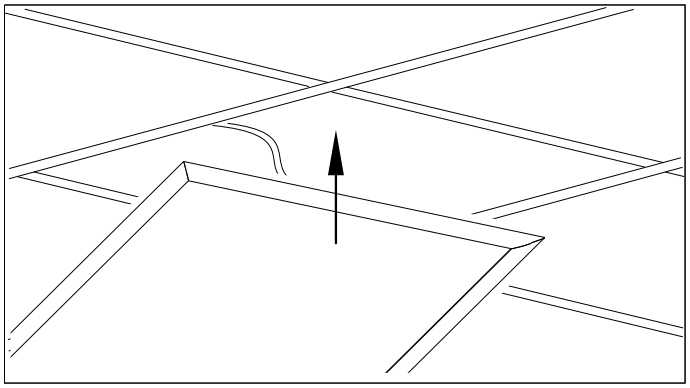

REGIOLUX
Regiolux GmbH
Hellinger Str. 3
D-97486 Königsberg/Bay.
T 09525 89-0
http://www.regiolux.de
info@regiolux.de

Art-Nr.: 532291 - 02/19

INSTRUCTION

PE /625-EL LED 6025

PE /600-EL LED 6026

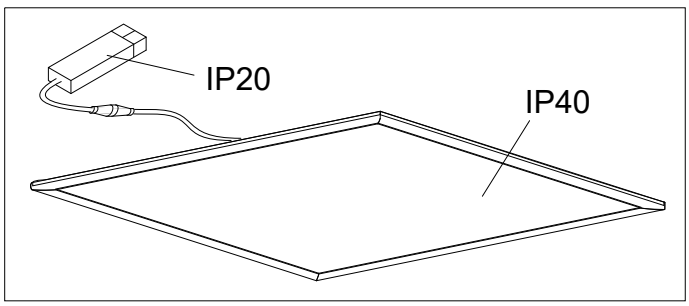

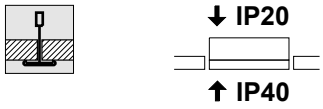

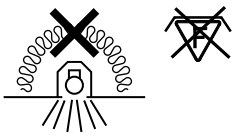

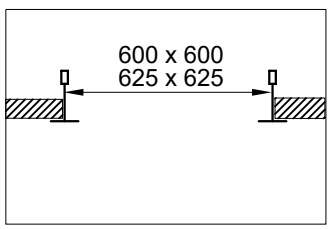

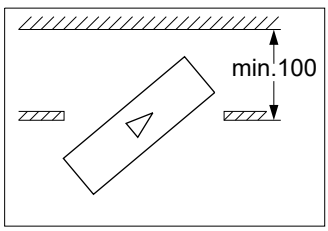

1

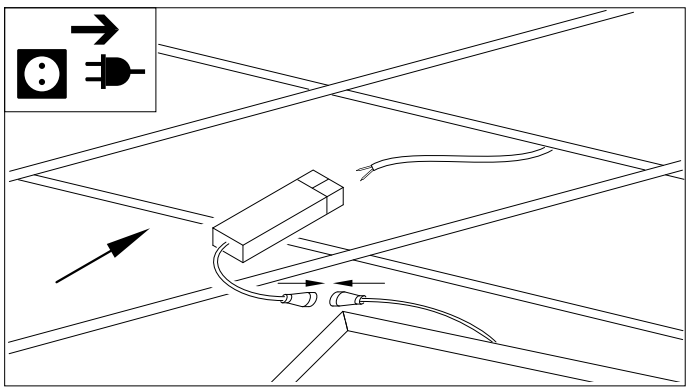

2

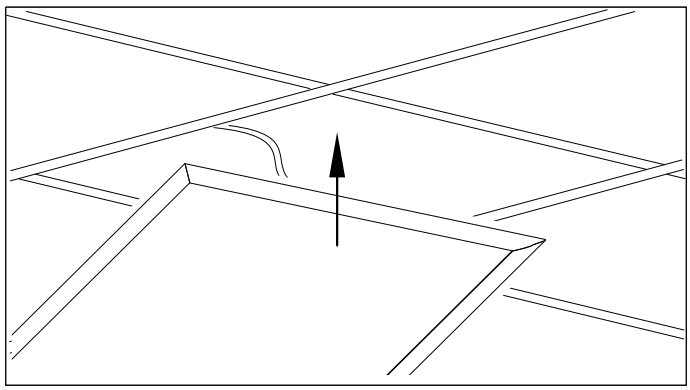

REGIOLUX
Regiolux GmbH
Hellinger Str. 3
D-97486 Königsberg/Bay.
T 09525 89-0
http://www.regiolux.de
info@regiolux.de

Art-Nr.: 532291 - 02/19